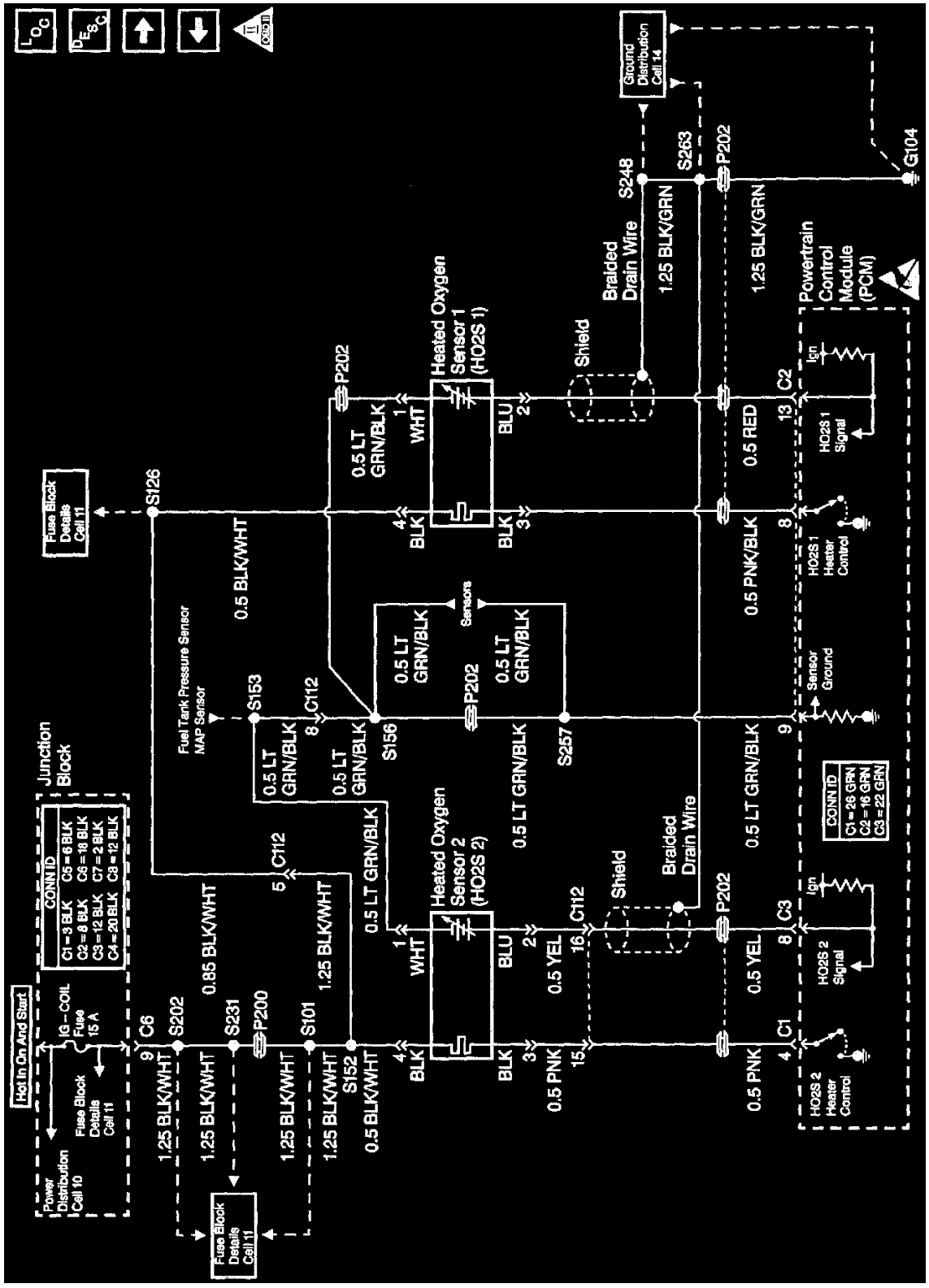
Hot In On And Start
Power Distribution Cell 10
Fuse Block Details Cell 11
IG - COIL Fuse 15 A
Junction Block
CONN ID
C1 = 3 BLK C5 = 6 BLK
C2 = 8 BLK C6 = 18 BLK
C3 = 12 BLK C7 = 2 BLK
C4 = 20 BLK C8 = 12 BLK
Fuel Tank Pressure Sensor
MAP Sensor
Heated Oxygen Sensor 1 (HO2S 1)
Heated Oxygen Sensor 2 (HO2S 2)
Shield
Braided Drain Wire
Ground Distribution Cell 14
Powertrain Control Module (PCM)
HO2S 1 Heater Control
HO2S 1 Signal
HO2S 2 Heater Control
HO2S 2 Signal
Sensor Ground
Ign
CONN ID
C1 = 26 GRN
C2 = 16 GRN
C3 = 22 GRN
1.25 BLK/WHT
0.86 BLK/WHT
0.5 BLK/WHT
0.5 LT GRN/BLK
0.5 PNK
0.5 YEL
0.5 RED
0.5 PNK/BLK
1.25 BLK/GRN
G104