LCD INTERFACE CONNECTION

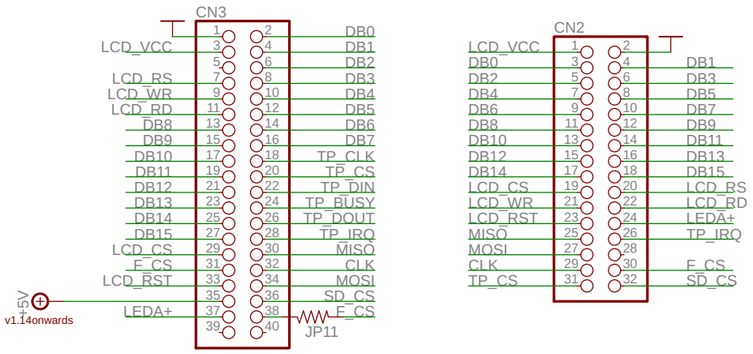

LEVEL TRANSLATION IC

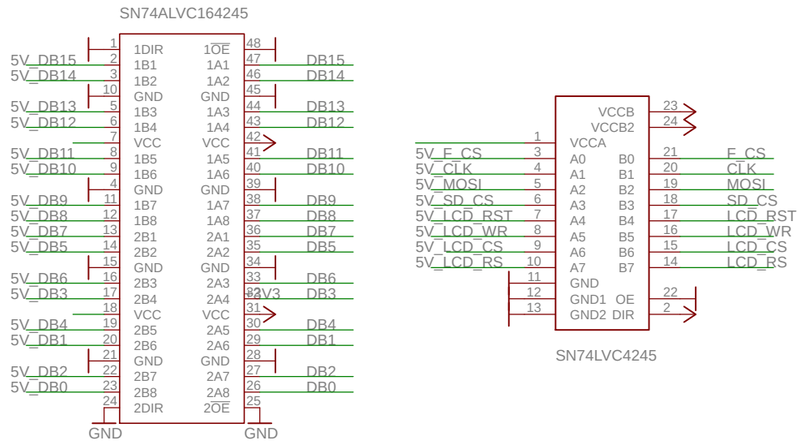

SPI FLASH/SD SLOT

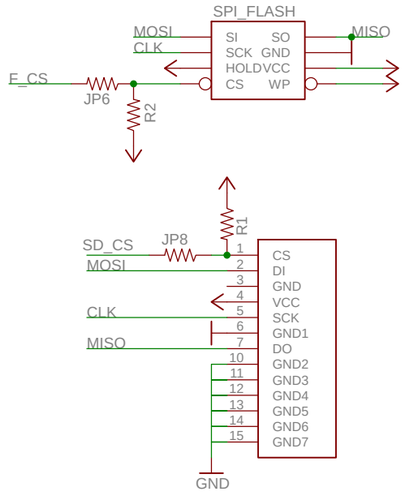

ARDUINO MEGA2560 CONNECTION

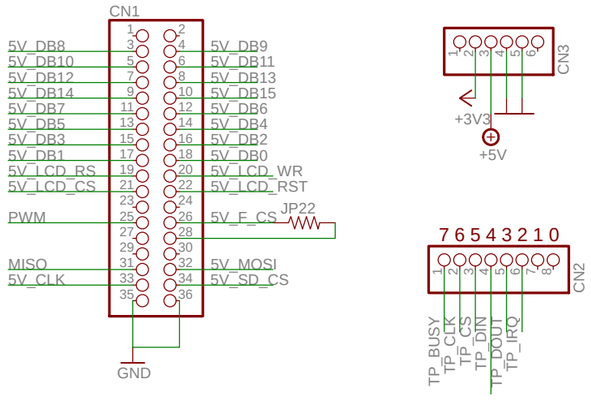

JUMPERS CONFIG

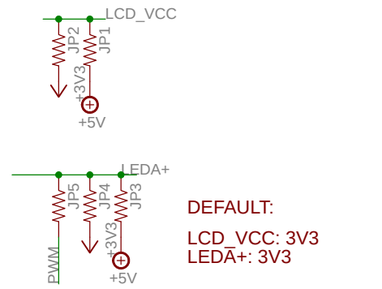

DEFAULT:

LCD_VCC: 3V3
LEDA+: 3V3

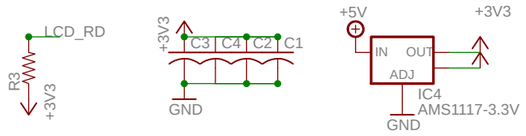

CTE TFT LCD/SD Shield for Arduino MEGA2560 v1.12-1.14