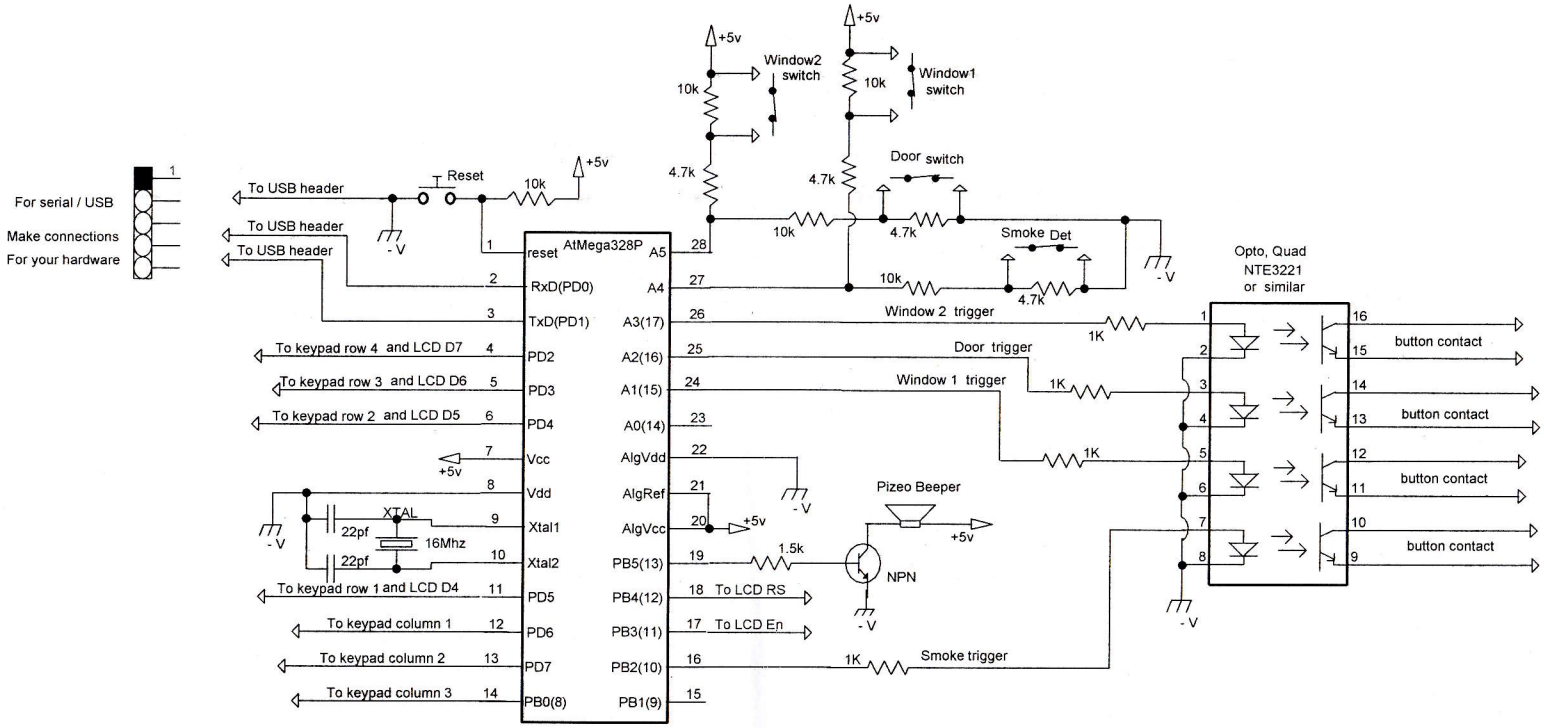

Title SimpleSecuritySystem		
Author self		
File ecuritySys\SimpleSecuritySys\CircuitDiagram.dsn		Document
Revision 1.0	Date 2 - 15 - 2015	Sheets 1 of 1