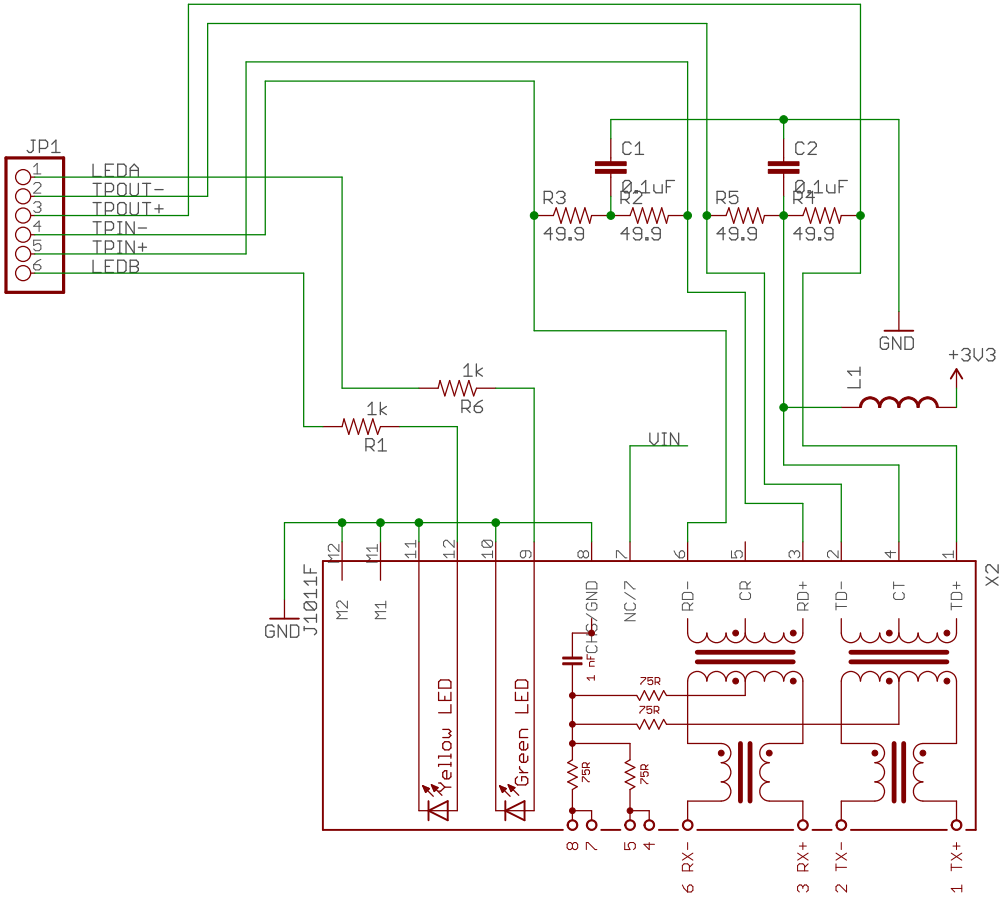

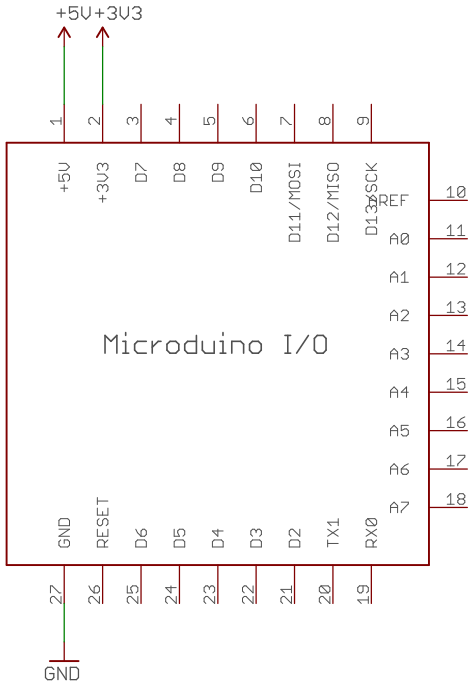

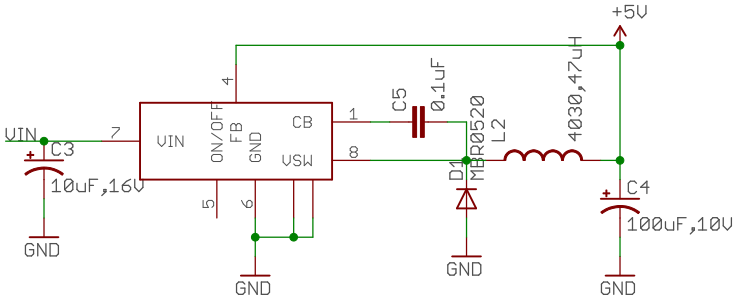

Microduino Studio	
TITLE: Microduino-RJ45	
Document Number:	REV:
Date: 2012/12/31	Sheet: 1/1