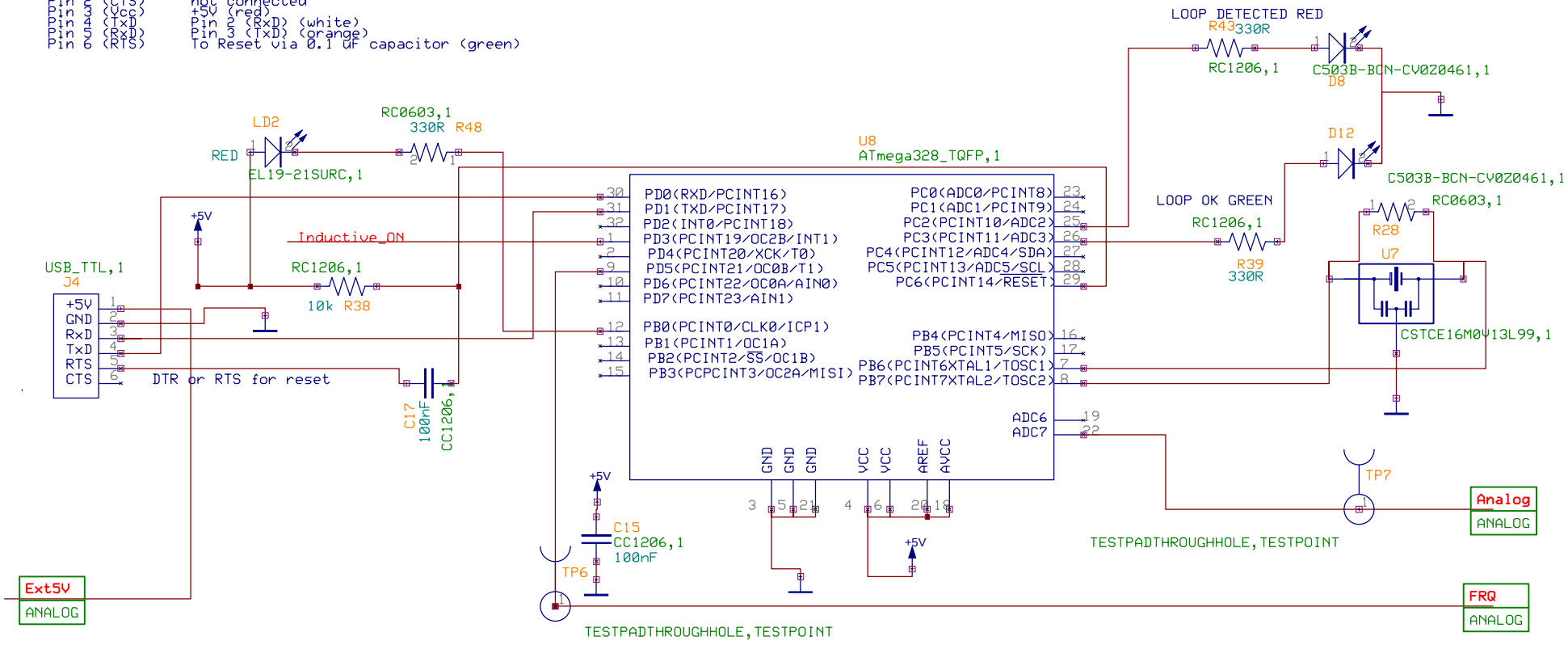FTDI cable	Target board
Pin 1 (GND)	Gnd (blue)
Pin 2 (CTS)	not connected
Pin 3 (Vcc)	+5V (red)
Pin 4 (TxD)	Pin 2 (RxD) (white)
Pin 5 (RxD)	Pin 3 (TxD) (orange)
Pin 6 (RTS)	To Reset via 0.1 uF capacitor (green)